BASSHABIT

RoHS compliant

REBEL

R25T

- 25mm PEI Dome tweeter
- 92dB sensitivity with a clear freq. response
- Built in 6db crossover and slim Neo magnet for space saving solution
- Easy upgrade with a great “bang for the buck” experience
- Including flush & angled casing, screws and pre-mounted cables

Product Specifications

Component:	Tweeter
Size:	25mm (1”)
RMS Power:	40W
MAX Power:	80W
PEAK Power:	120W
Impedance:	4 Ohm
Sensitivity:	92dB
Frequency range:	4000-20000Hz
Cone Material:	PEI diaphragm
Frame Material:	Plastic
Crossover	6dB / 3.3 uf
Magnet:	Neodymium
Voice Coil Diameter:	13.28mm (0.5”)
Voice Coil Wire:	Copper
Weight:	0.05kg

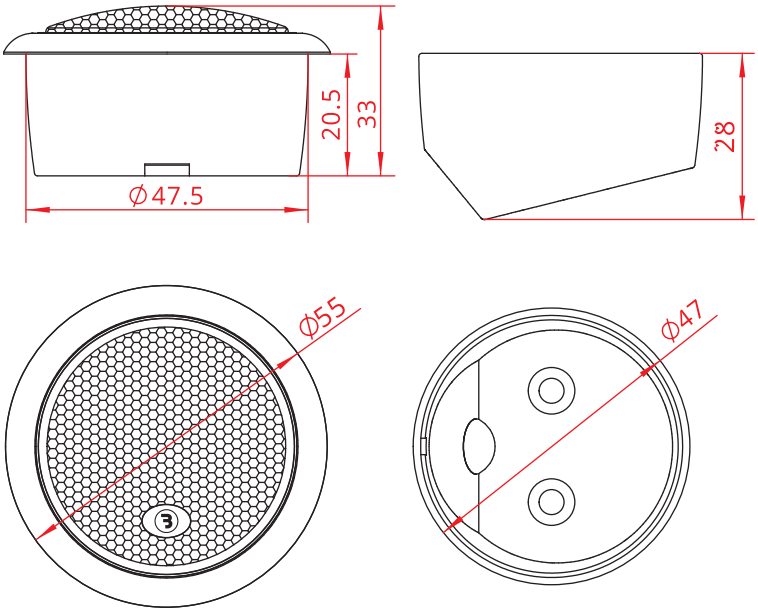

Master carton units	Netto weight	Gross weight	Master carton size	EAN Code
10prs	1kg	2.6kg	23.5x21x26cm	7394409026550